Information Society Technologies

ATESST

“Advancing Traffic Efficiency and Safety through Software Technology, Phase 2 (ATESST2)”

Variability

ATESST2 Final Workshop
June 21 2010

Two Levels of Variability

Variability on the **vehicle level**:
- Very abstract ; no design/implementation details.
- Distinction of customer vs. technical perspective.
- Modeling means: only Feature Modeling.

Variability on the **„artifact level“**:
- Variability of the actual requirements, design, etc.
- Only technical perspective.
- Modeling means: Feature Modeling + Variation Points inside FAA/FDA/...-Diagrams

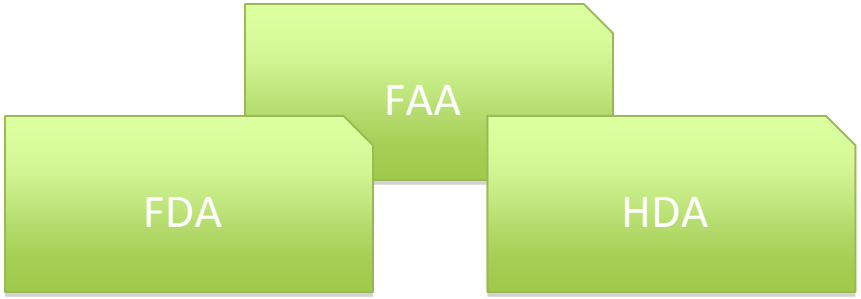

Concepts Used on These Levels

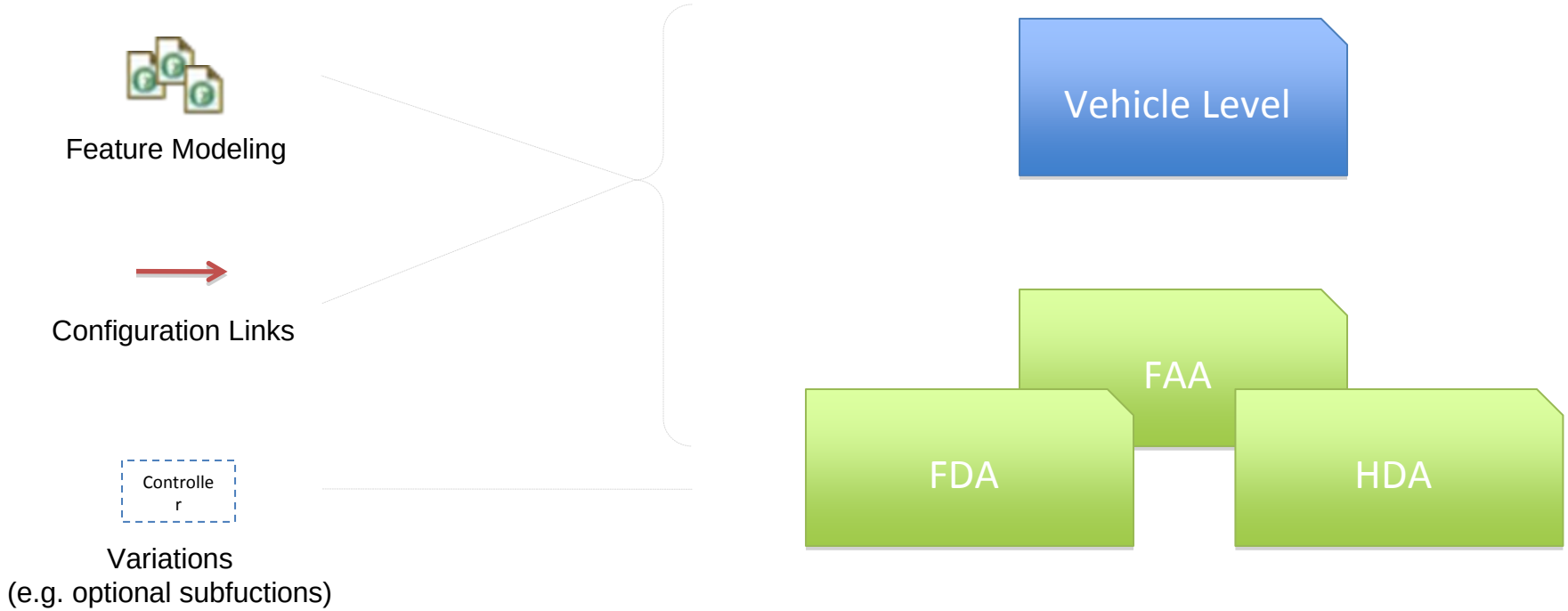

Plus: Multi-Level Approach for cross-model-range variability (currently only on Vehicle Level, might be extended)

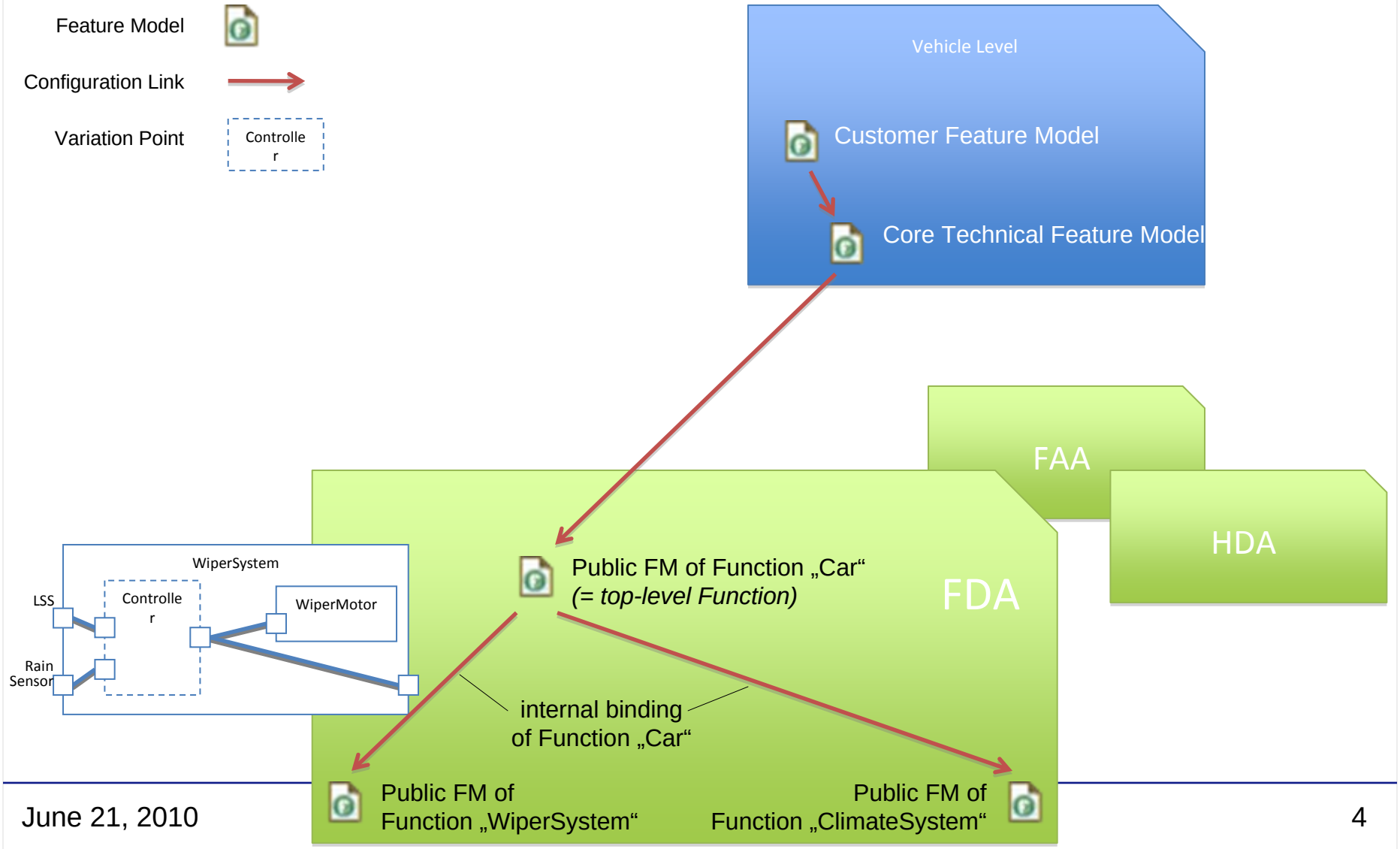
Feature Model
Configuration Link
Variation Point
Controlle
r
Vehicle Level
Customer Feature Model
Core Technical Feature Model
FAA
HDA
FDA
Public FM of Function „Car“
(= top-level Function)
WiperSystem
LSS
Controlle
r
WiperMotor
Rain
Sensor
internal binding
of Function „Car“
Public FM of
Function „WiperSystem“
Public FM of
Function „ClimateSystem“

Feature Models

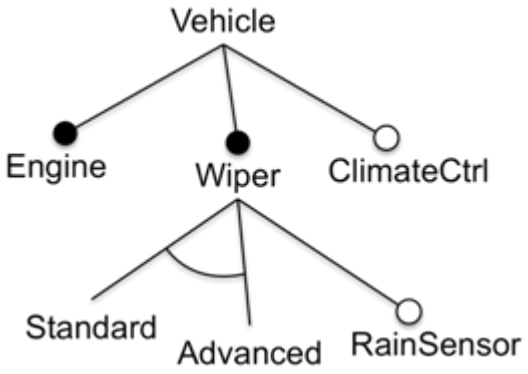

Feature Model

Cardinality-based feature models ...
(cf. Czarnecki et al.)

with some modifications
(e.g. 1+ root features per model)

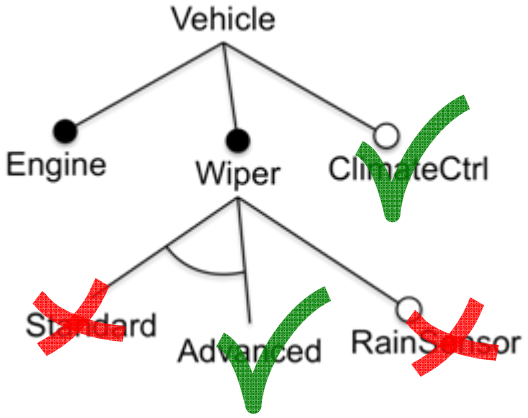

Configuration (of a Feature Model)

incl. support for ...
– parameterized features
(a.k.a. feature attributes)
– instances for cloned features
(subtrees of instances can be configured separately)

Configuration Links

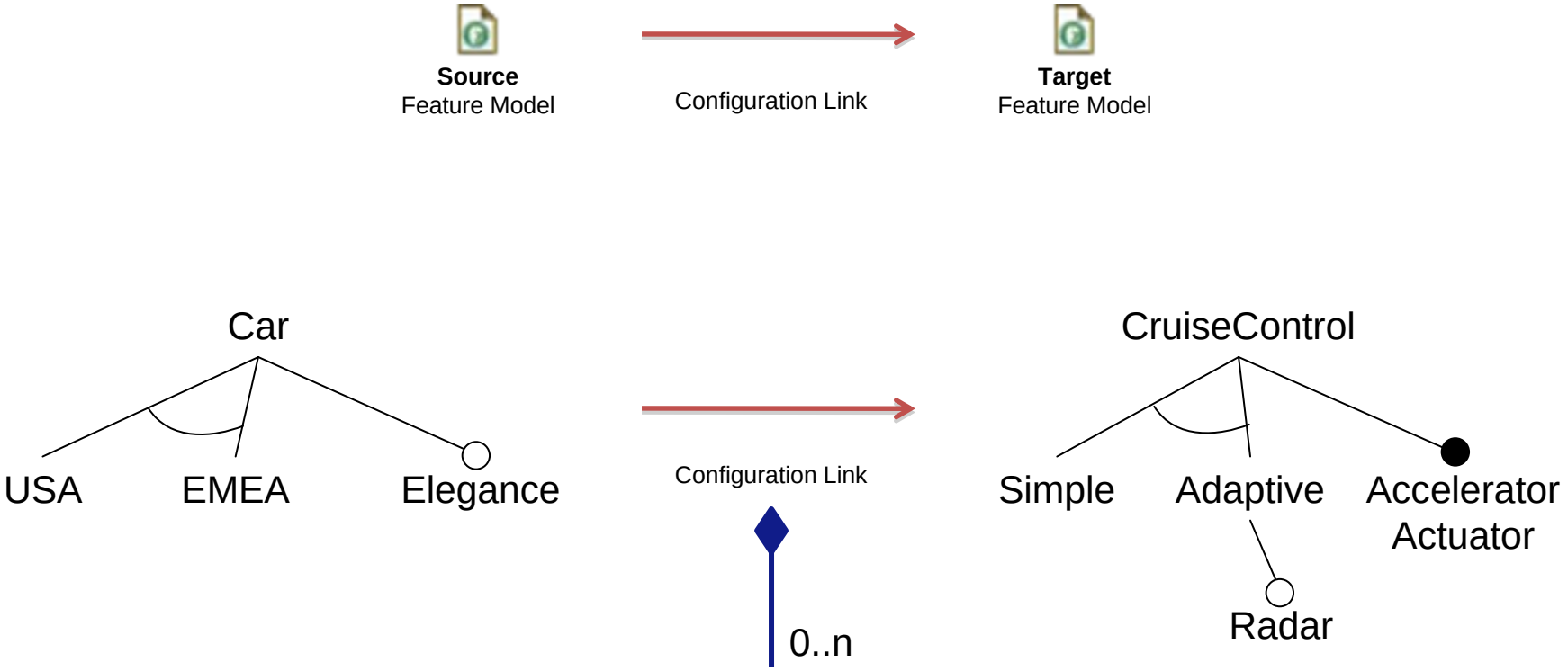

„Use Radar in USA.“

Variation Definition

This port is not present in all system configurations :

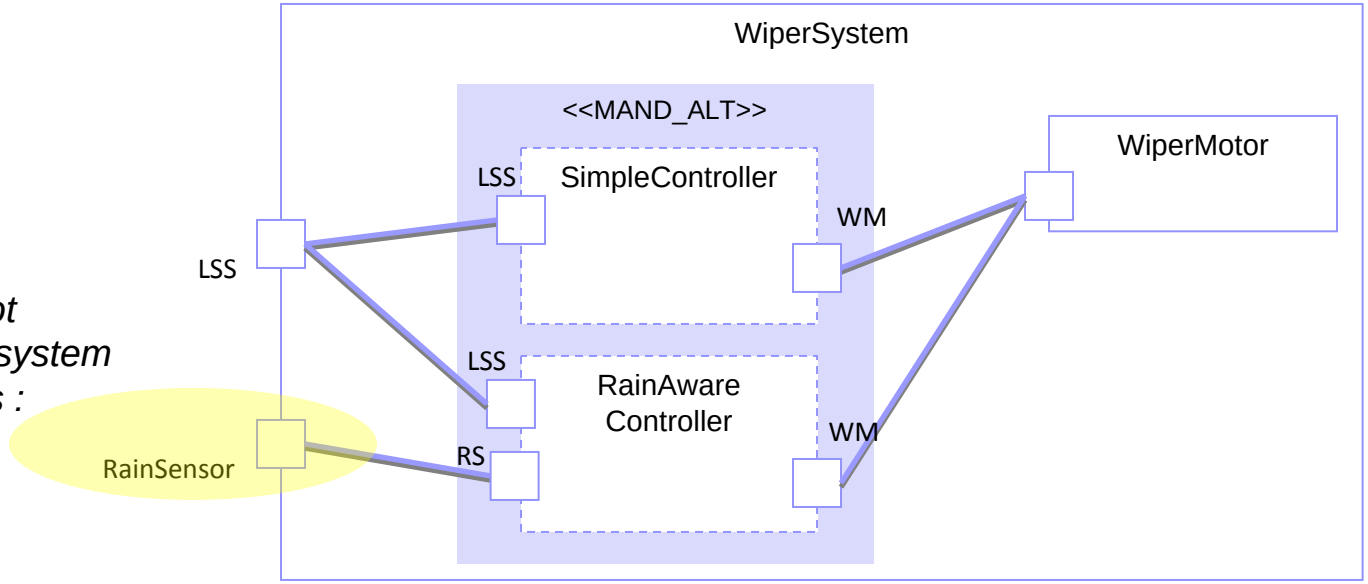

Technical realization does not require explicit variation points.
In simple cases, optional FunctionPrototypes and VariationGroups can be used directly to achieve same result.

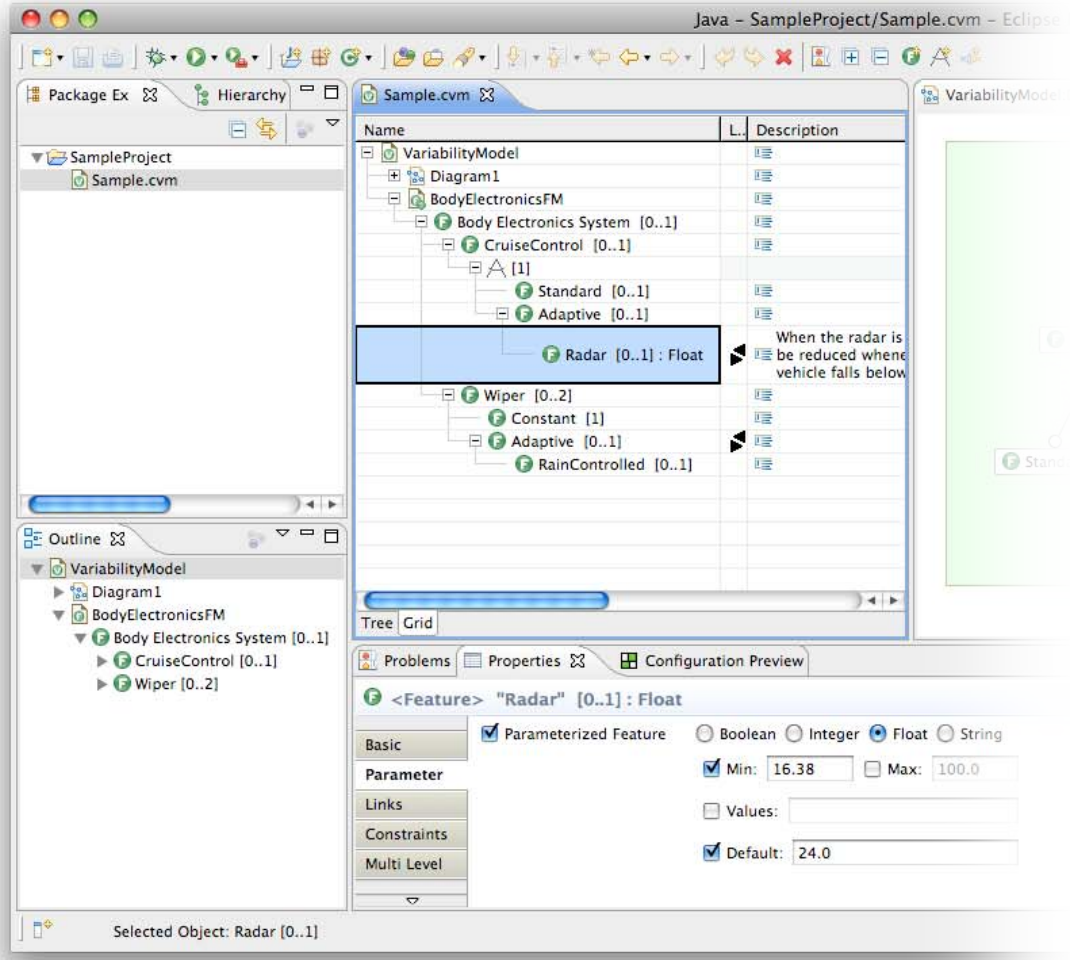
Java - SampleProject/Sample.cvm - Eclipse
Package Ex
Hierarchy
SampleProject
Sample.cvm
Sample.cvm
Name
Description
VariabilityModel
Diagram1
BodyElectronicsFM
Body Electronics System [0..1]
CruiseControl [0..1]
[1]
Standard [0..1]
Adaptive [0..1]
Radar [0..1] : Float
When the radar is
be reduced whene
vehicle falls below
Wiper [0..2]
Constant [1]
Adaptive [0..1]
RainControlled [0..1]
Tree
Grid
Outline
VariabilityModel
Diagram1
BodyElectronicsFM
Body Electronics System [0..1]
CruiseControl [0..1]
Wiper [0..2]
Problems
Properties
Configuration Preview
<Feature> "Radar" [0..1] : Float
Basic
Parameter
Links
Constraints
Multi Level
Parameterized Feature
Boolean
Integer
Float
String
Min: 16.38
Max: 100.0
Values:
Default: 24.0
Selected Object: Radar [0..1]

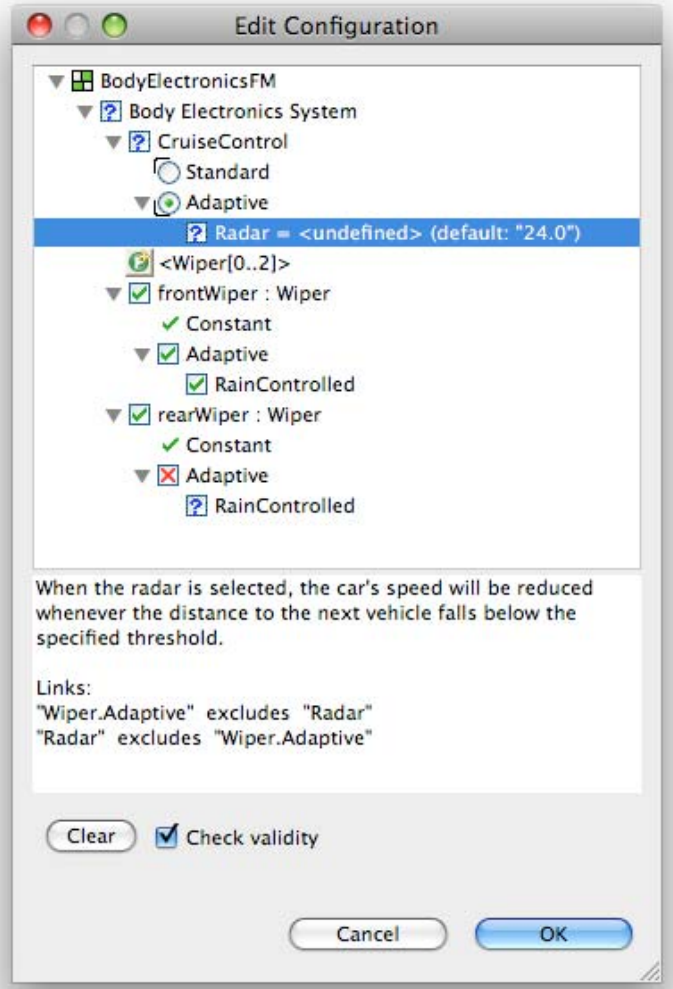
Edit Configuration
BodyElectronicsFM
Body Electronics System
CruiseControl
Standard
Adaptive
Radar = <undefined> (default: "24.0")
<Wiper[0..2]>
frontWiper : Wiper
Constant
Adaptive
RainControlled
rearWiper : Wiper
Constant
Adaptive
RainControlled
When the radar is selected, the car's speed will be reduced whenever the distance to the next vehicle falls below the specified threshold.
Links:
"Wiper.Adaptive" excludes "Radar"
"Radar" excludes "Wiper.Adaptive"
Clear
Check validity
Cancel
OK

Compositional Variability

FunctionTypes have ...

*a **Public Feature Model**,*

*an **Internal Binding.***

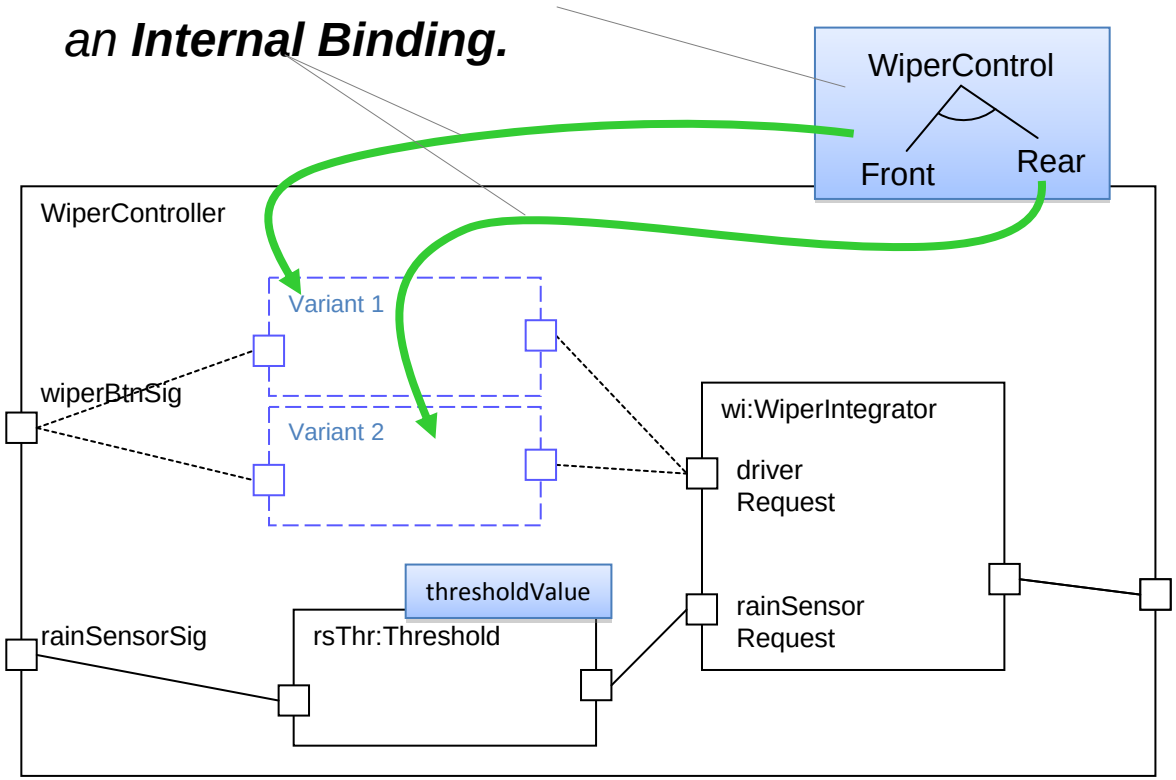

Compositional Variability

The Internal Binding can be more complex ...

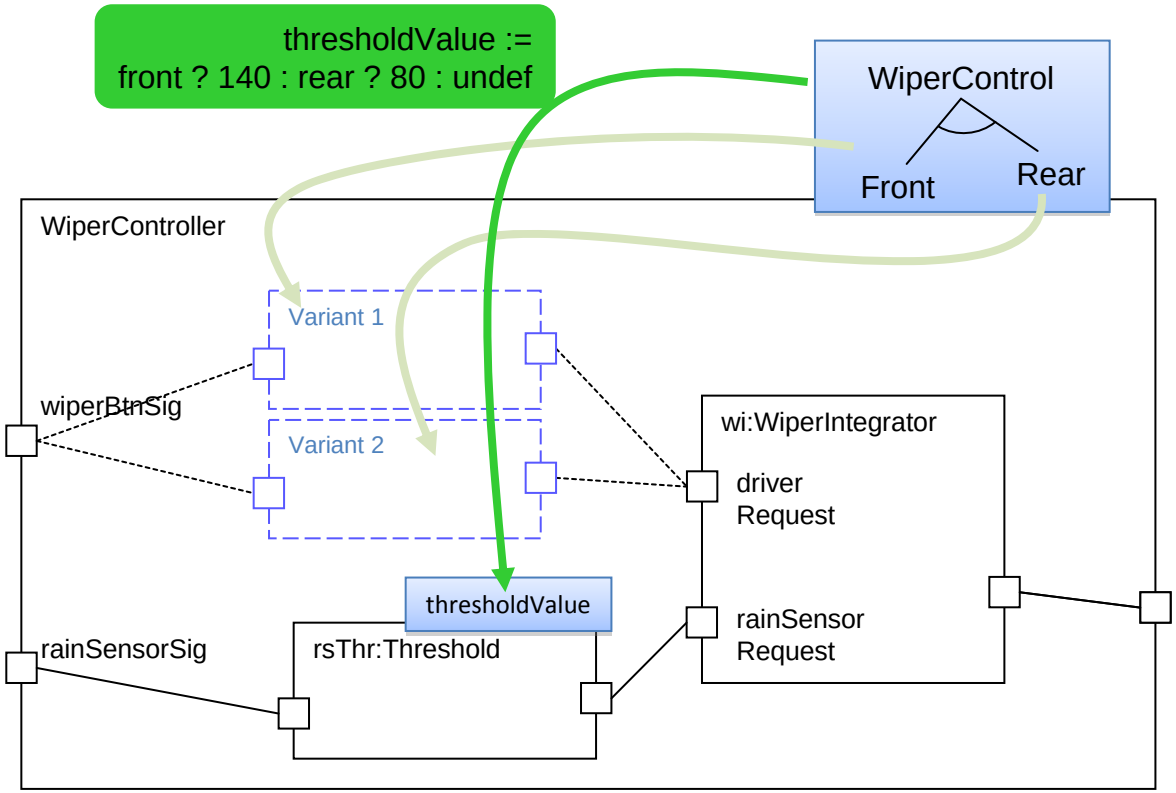

Compositional Variability

Note:

- deriving lower level configurations

1 configuration of FM of containing component → N configurations of FMs of contained components

- mapping is part of definition of containing component
- mapping is internal / private
  ⇒ information hiding for binding variability of lower-level components

„Configuration Hiding“

(cf. Reiser, Tavakoli, Weber HICSS-42 2009)

Compositional Variability

Syntax & semantics of configuration decisions ...

Defined by Variability Specification Language (VSL).

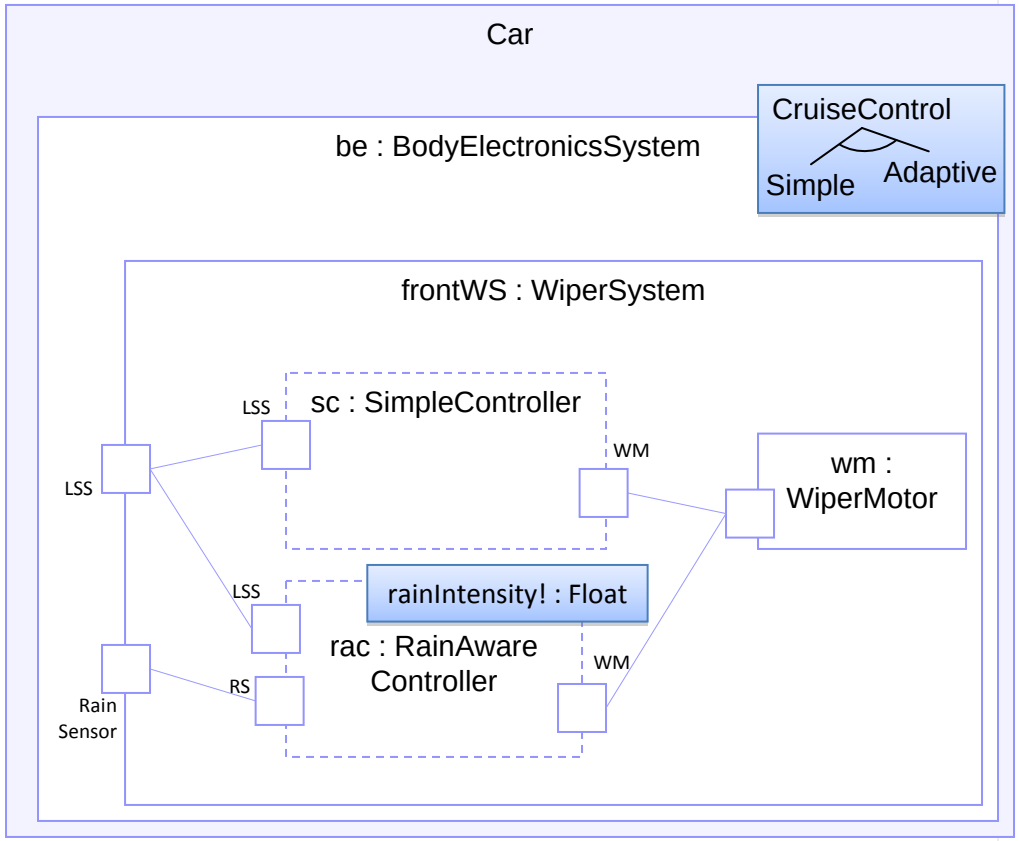

Example 1:
`be#CruiseControl.Adaptive[+]`

Example 2:
`be.frontWS.sc[+]`

Example 3:
`be.frontWS.rac[+]`
`be.frontWS.rac#rainIntesity=0.83`

Benefits of Compositional Variability

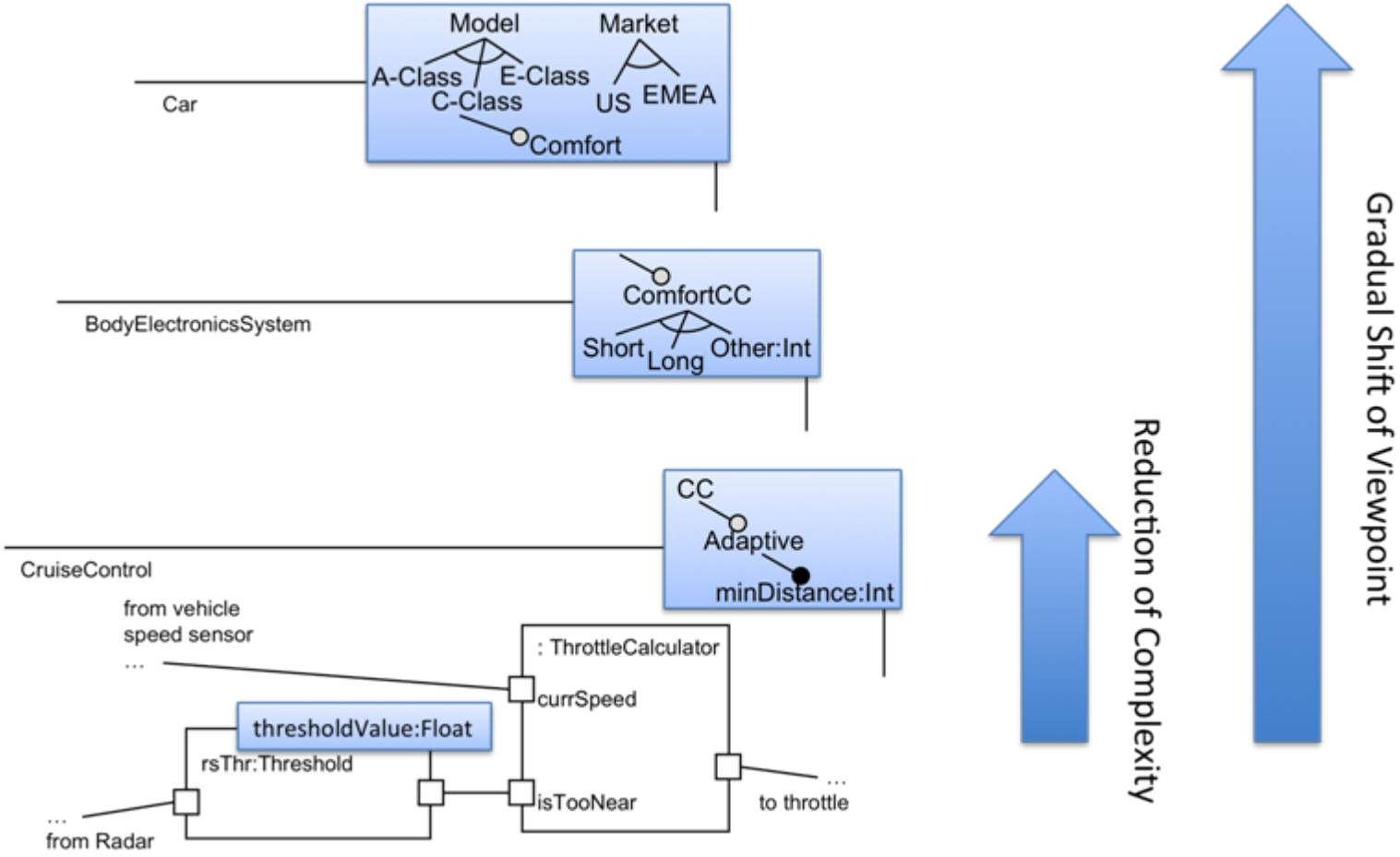

Summary: EAST-ADL Variability

Supports:

- multiple viewpoints (e.g. technical vs. end-customer)
- different abstraction levels

- containment hierarchies – „*compositional variability management*“
- complete-system configuration

- reuse ← „*configuration hiding*“
- integration within a larger context
  - cooperative active safety systems
  - manufacturer/supplier scenario

- pragmatic cross-model-range VM (not covered in this presentation)

BACKUP SLIDES

Variation Definition

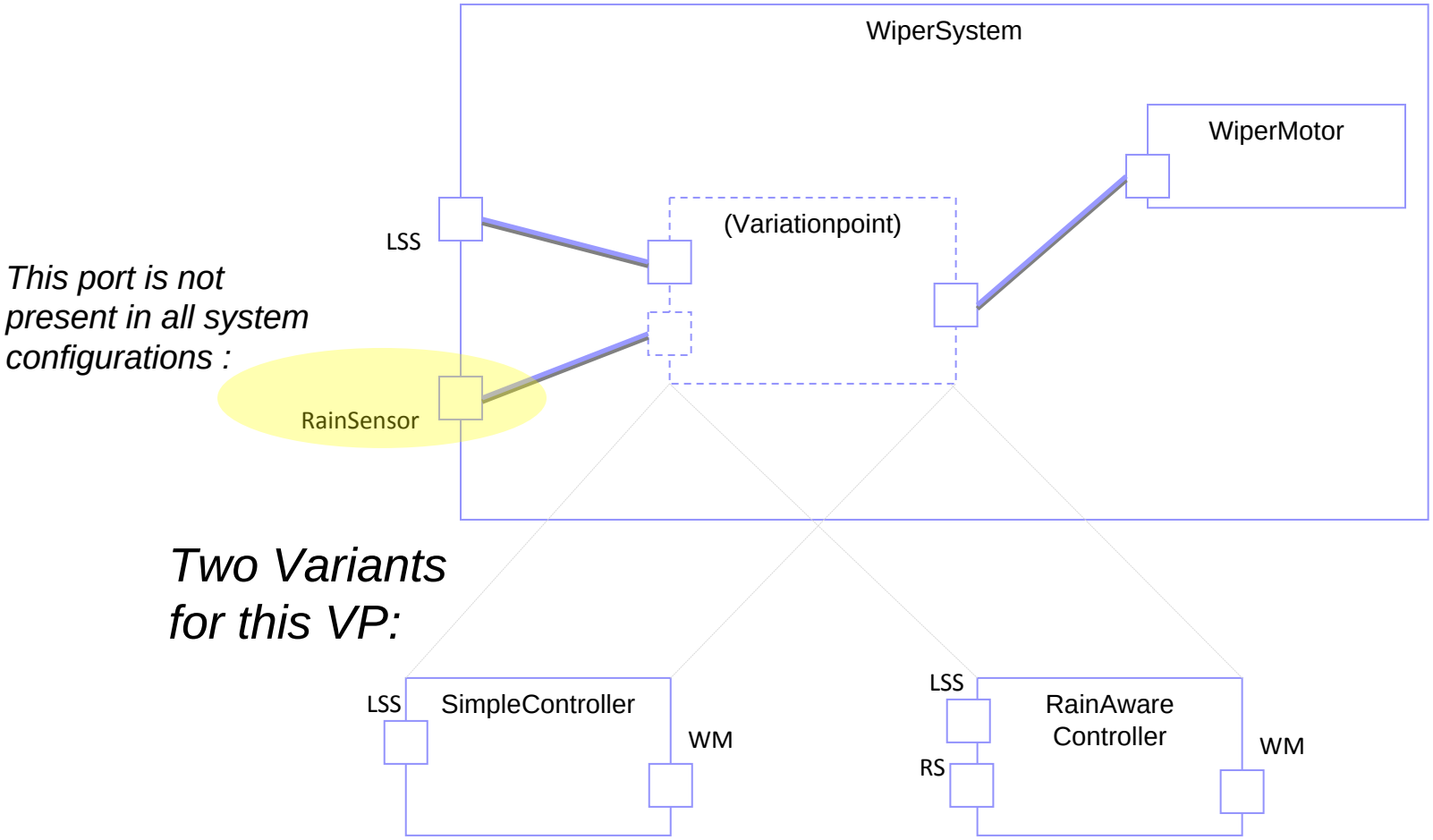

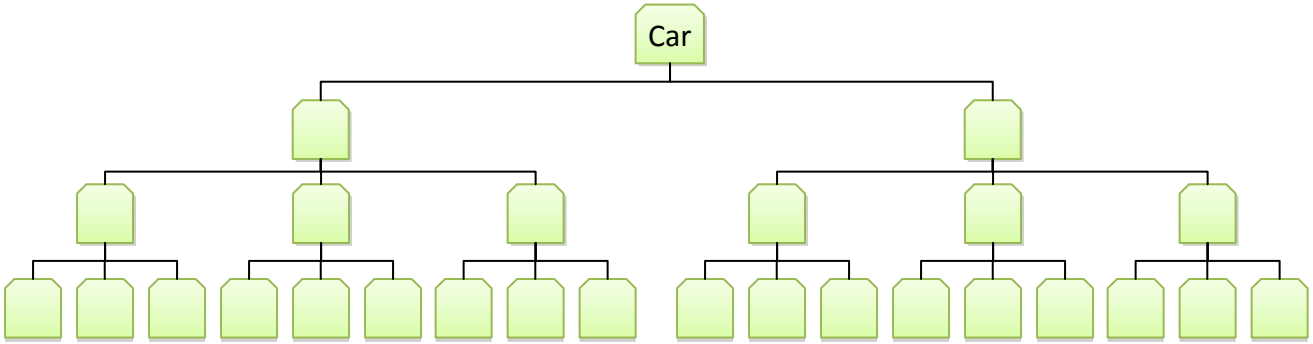
Car

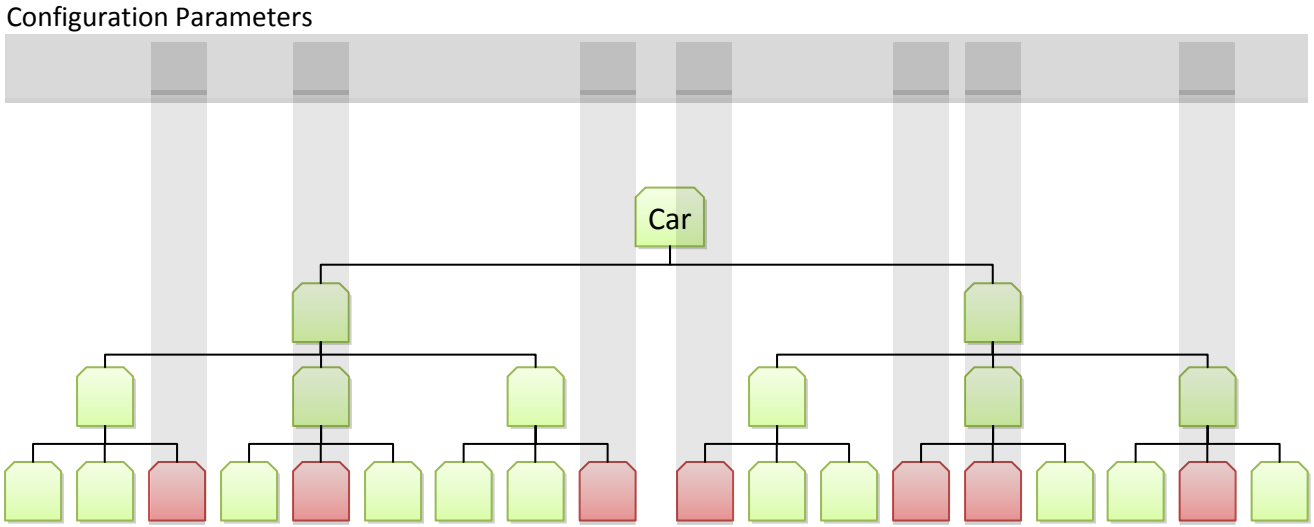

flat

hierarchical

How to organize and bind variability in a hierarchical manner ?